RDL®

High Performance Audio Products. Made in America.

ACCESSORIES

Models **D-RT2, DS-RT2, DB-RT2**

Remote Control Selector



- Remote Selection of **ON** or **OFF**
- Single-Button Selection for Each Function
- Open -collector Switching
- Rear Panel Connections on Detachable Terminal Block
- 3-wire or 4- wire Remote Wiring
- Professional Aesthetic Appearance
- Ultra-Compact All Metal Construction
- LED Indication

The D SERIES-RT2 is part of the group of versatile wall-mounted products from Radio Design Labs. The standard mounting case can be directly fastened in North American electrical boxes or in RDL International wall boxes.

APPLICATION: The D SERIES-RT2 is part of the RDL accessories group and is designed as a functional and visual complement to many other RDL remote controls such as the D-RLC2, D-RLC3 or D-RLC10K Remote Level Controls.

The -RT2 is a wall-box mounted remote module designed to directly control equipment which utilizes pull-to-ground switching.

The front panel of the -RT2 features two pushbuttons with two associated LEDs. Upon initial power-up, the **OFF** mode is selected. Touching the other button de-selects **OFF** and immediately selects **ON**. An LED adjacent to each button shows which mode is selected.

In a typical installation, the -RT2 may be used to turn an audio or video source on or off. To turn on an audio source, the -RT2 may be connected to an RDL ST-SSR1 or ST-RX2 Solid-State Audio Switch. For video switching, an RDL TX-MVX may be used. In each of the above examples, only one output terminal is needed for triggering, therefore a single shielded pair (3-conductor cable) is required for remote connection. For more complex switching networks, both outputs (**ON** and **OFF**) may be used. In an audio or video control installation, the -RT2 may be mounted adjacent to an RDL remote volume control, such as the D-RLC2, D-RLC3 or D-RLC10K.

In an installation where a wall-mounted remote control is needed to power up a system or subsystem, the -RT2 may be connected to the control terminal of the RU-SQ6A Power-Up Sequencer. Other RDL modules using open-collector input switching may be connected to the -RT2, such as the STM-2X. In this case, the -RT2 provides a remote off/on switching of a mic.

The -RT2 is constructed on a durable polycarbonate-faced, powder-coated steel panel. Electronics are housed in a metal enclosure featuring a rear panel detachable terminal block for easy wiring. The attractive front-panel graphics and quality construction make the RT2 the ideal choice in any high quality and economical wall-mounted remote control installation.

In installations where ULTRASTYLE™ wall controls are preferred, use the RUC-4 Universal Remote. The -RT2 is part of the RDL accessories group and is designed as a functional and visual complement to many other RDL remote controls such as the D-RLC2, D-RLC3 or D-RLC10K Remote Level Controls.

RDL®

High Performance Audio Products. Made in America.

ACCESSORIES

Models **D-RT2, DS-RT2, DB-RT2**

Remote Control Selector

Installation/Operation

EN55103-1 E1-E5; EN55103-2 E1-E4; EN60065
Typical Performance reflects product at publication time exclusive of EMC data, if any, supplied with product. Specifications are subject to change without notice. This product is Professional Apparatus.

Mounting

The D SERIES–RT2 should be mounted in an RDL WB-1U wall box or equivalent. The ambient operating environment must not exceed 40 degrees C.

The D-RT2 can control any RDL Module that has a SLAVE terminal, or any Device with a Pull-to-Ground Terminal

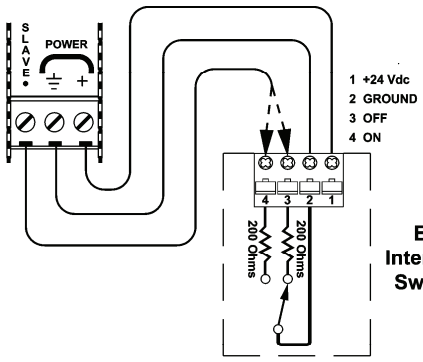

Functional Equivalent to Internal Solid State Switching Circuit

Typical Connection Example

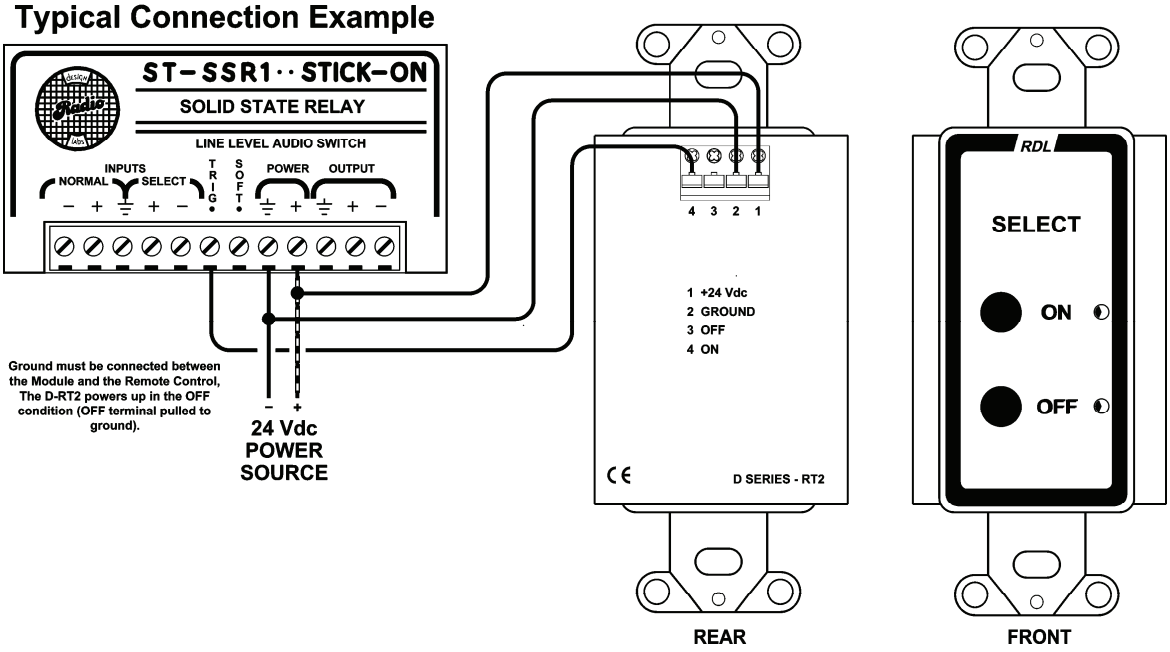

TYPICAL PERFORMANCE

Selectors:	2 Momentary Pushbuttons, 1 for **ON**, 1 for **OFF**
Indicators:	2 LEDs, Indicates status **ON** or **OFF**
Connections:	Power input; Separate Open-collector outputs for **ON** and **OFF** (25 mA)
Power Requirement:	24 to 33 Vdc @ 30 mA, Ground-referenced
Mounting:	Mounts in US standard electrical box, decorative plate available separately
Dimensions:	Height: 4.11 in. (10.4 cm) Depth: 1.66 in. (4.21 cm) Width: 1.72 in. (4.37 cm)

Radio Design Labs Technical Support Centers
U.S.A. (800) 933-1780, (928) 778-3554 - Europe [NH Amsterdam-Duivendrecht] (++31) 20-6238 983